EASY ASSEMBLY AND OPERATION INSTRUCTIONS

07178353 Spell Speaking Witch

This item, when assembled by the following instructions, should take 15 minutes to assemble.
Please follow the step by step guide and enjoy your Spell Speaking Witch!

CARE AND STORAGE INSTRUCTIONS

For best performance operate your item indoors or in a sheltered outdoor area. We also recommend that you bring your item indoors during adverse weather (extreme cold, strong winds and/or rain). When not in use, store this product in it's original packaging. Keep away from heat and moisture.

WARNING

This item is not a toy and should be used for decoration only. This item contains small parts that can be a choking hazard. Keep all plastic and wire parts away from children. This product is intended for people ages 14 and up.

Please read all instructions carefully before assembling. Save this instruction sheet for future reference.

PARTS LIST

A. Base
B. Support Poles (x4)
C. Torso Frame
D. Hip Hoop
E. Shoulder Support
F. Step Here Activation Pad
G. Costume
H. Vest
I. Left Arm
J. Left Hand
K. Head
L. Right Arm
M. Right Hand with Book
N. Sash
O. Rope Belt
P. Hat with Hair

UL Power Adapter

* UL Power Adapter Spec
Input: 100 - 240VAC 50/60Hz
Output: 6.0V 1A

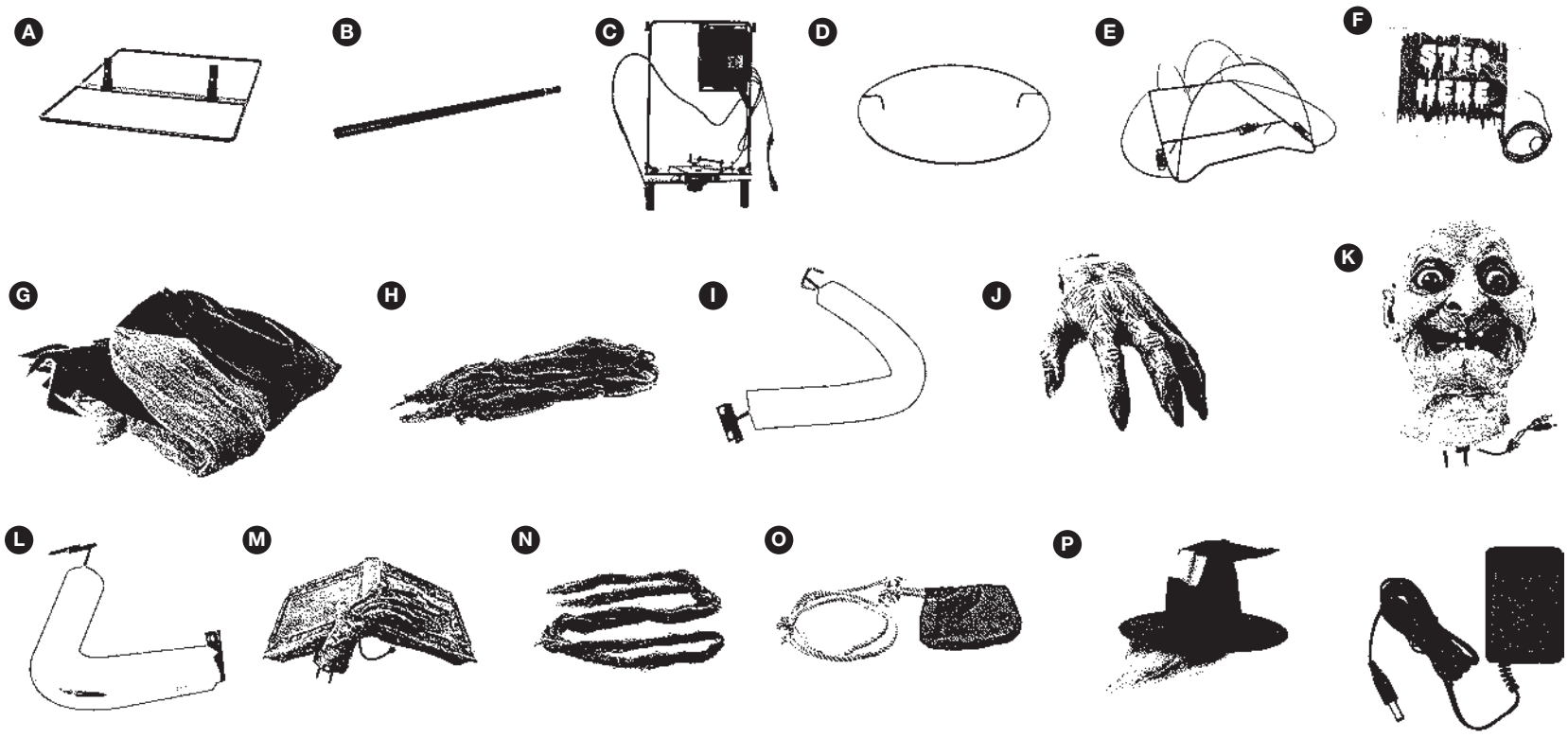

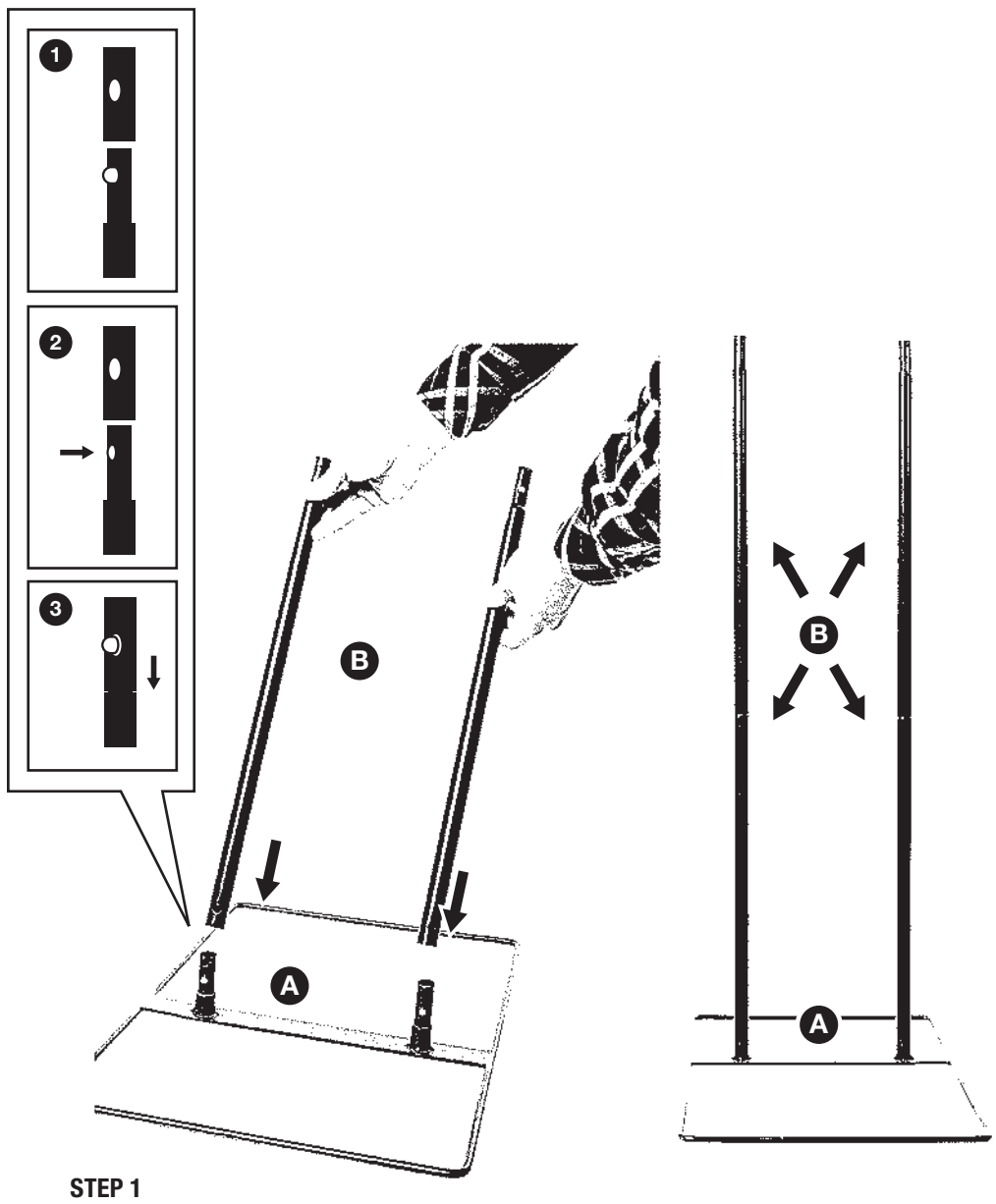

STEP 1

NOTE: The longer end of the (A) Base goes towards the front. First, assemble the (B) Support Poles to each other and to the (A) Base as shown, and secure by aligning the quick-connect push buttons into the pre-drilled holes.

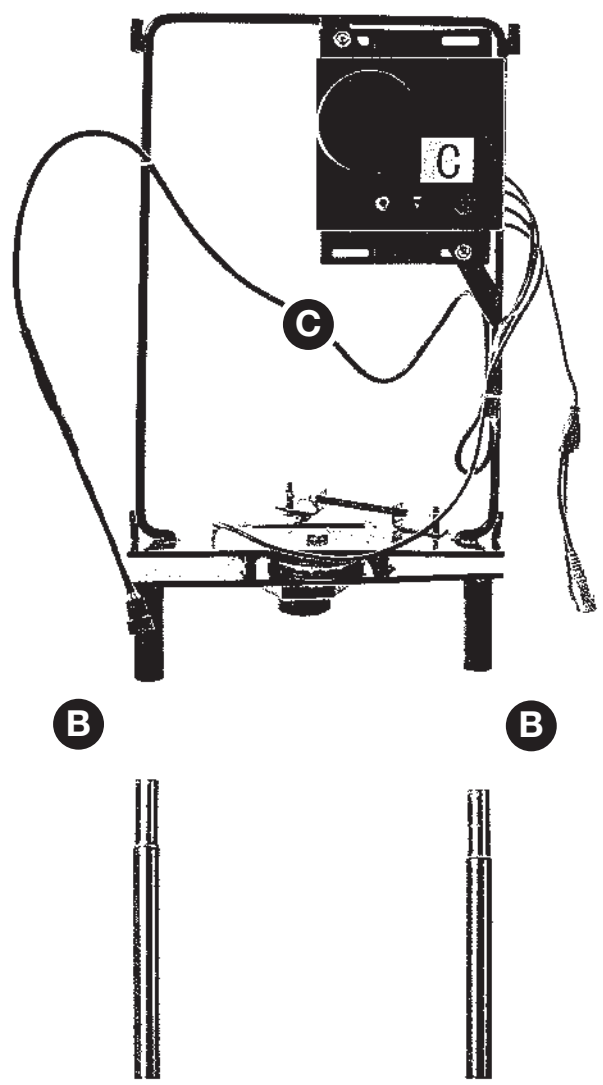

STEP 2

NOTE: The speaker on the Function Control Box located on the (C) Torso Frame should be facing front. Assemble the (C) Torso Frame onto the (B) Support Poles as shown, and secure by aligning the quick-connect push buttons into the pre-drilled holes.

2013 0411

PROCEED TO PAGE 2 > >

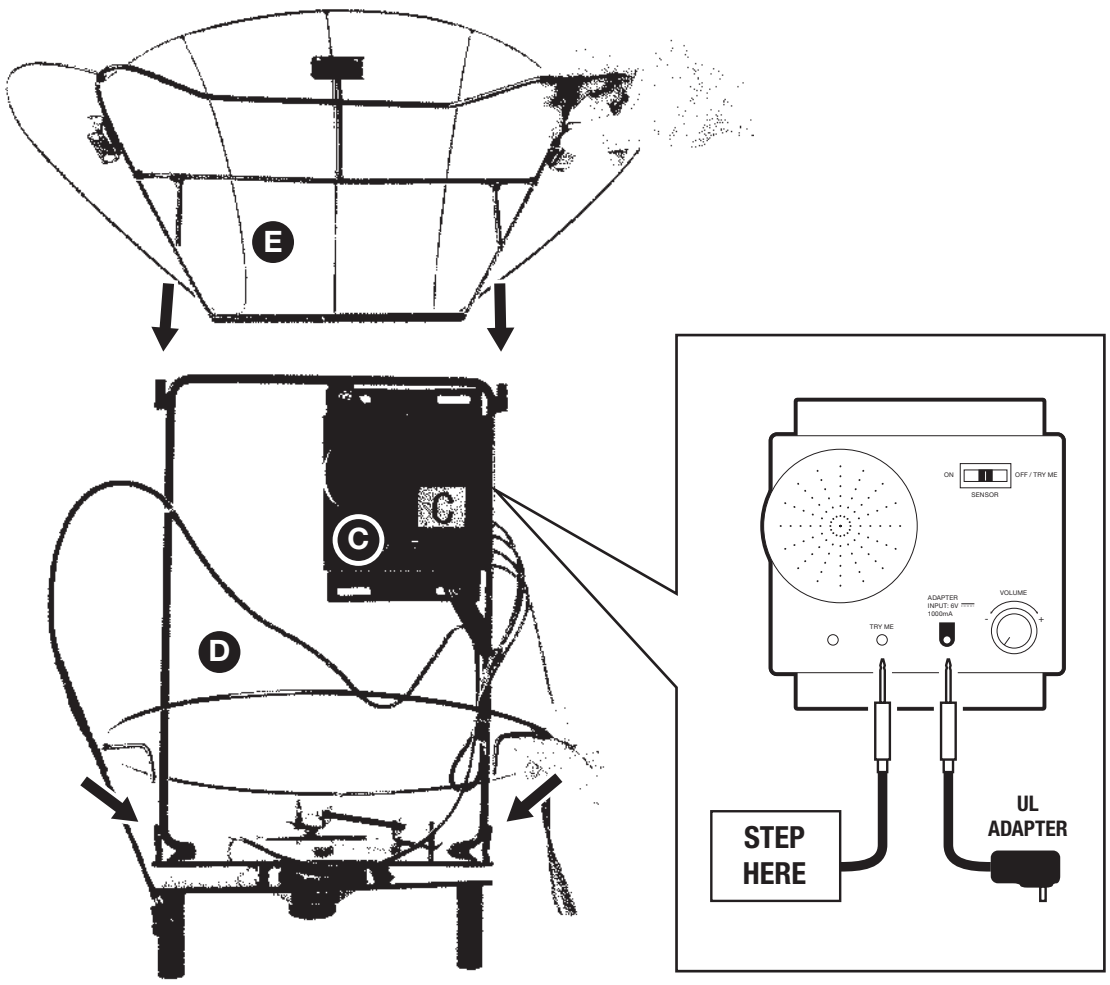

STEP 3
Lower the (D) Hip Hoop down over the (C) Torso Frame and attach through the slots located on the sides at the bottom of the (C) Torso Frame as shown. Next, attach the (E) Shoulder Support into the slots located at the top of the (C) Torso Frame as shown.

Note: Do not plug UL Power Adapter into power outlet until item assembly is completed.

Now, plug the UL Power Adapter into the input receiving jack marked "DC 6V" on the Function Control Box.

OPTIONAL: If you choose to use the (F) Step Here Try-Me Activation Pad, plug the connector into the input receiving jack marked "TRY ME" on the Function Control Box and set the Step Here pad in front of the character when ready to display.

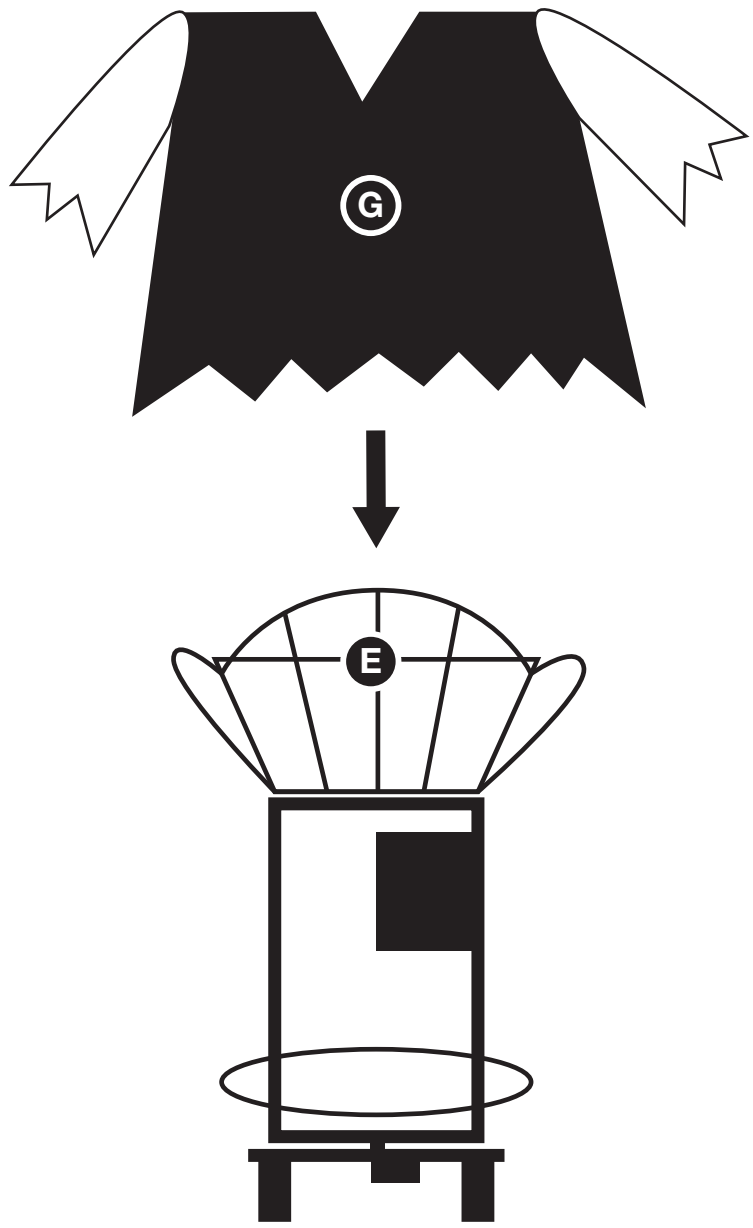

STEP 4
Lower the (G) Costume down over the (E) Shoulder Support & (C) Torso Frame so that the (G) Costume opens at the back.

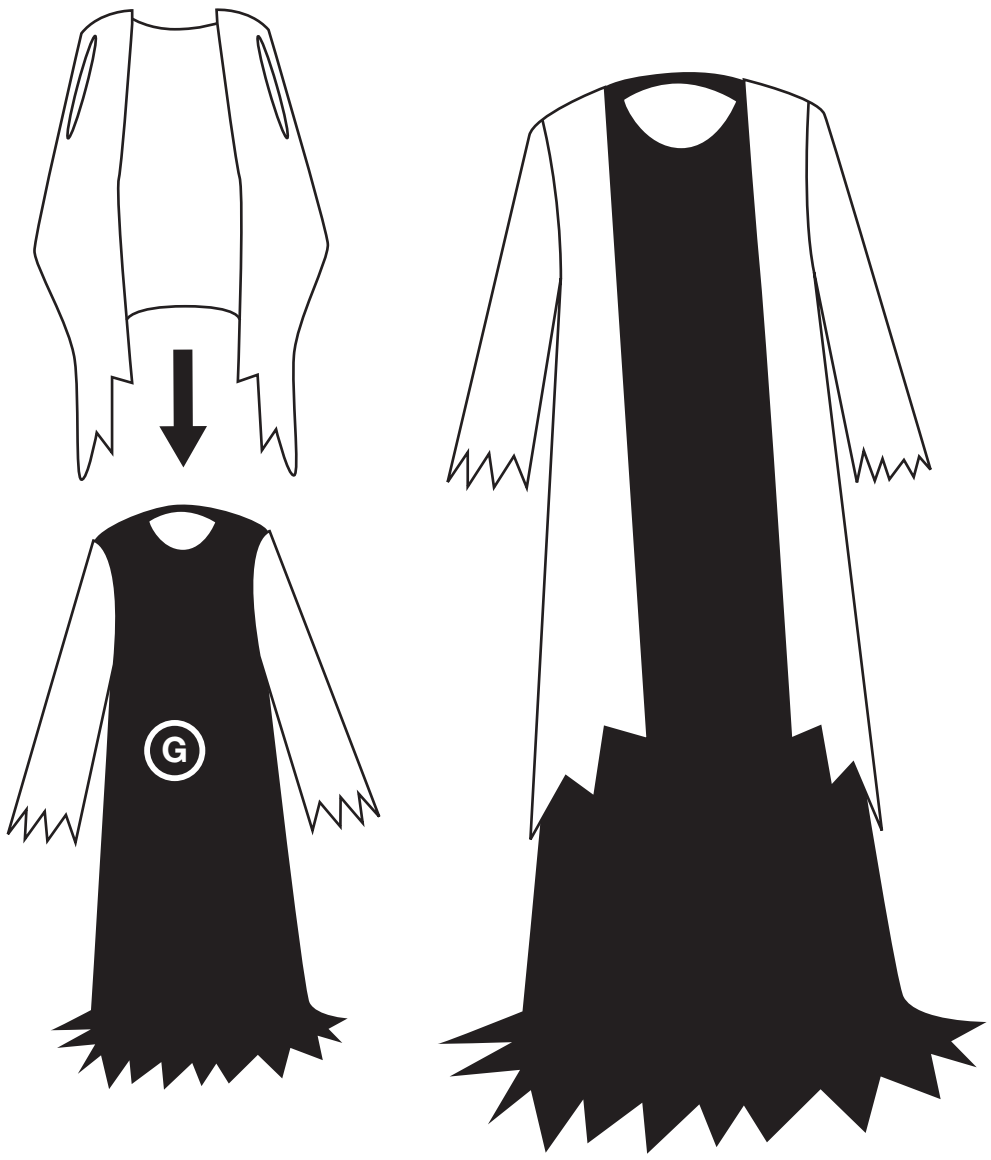

STEP 5
Next, drape the (H) Vest over the back of the (G) Costume and guide the sleeves through the arm openings in the (H) Vest.

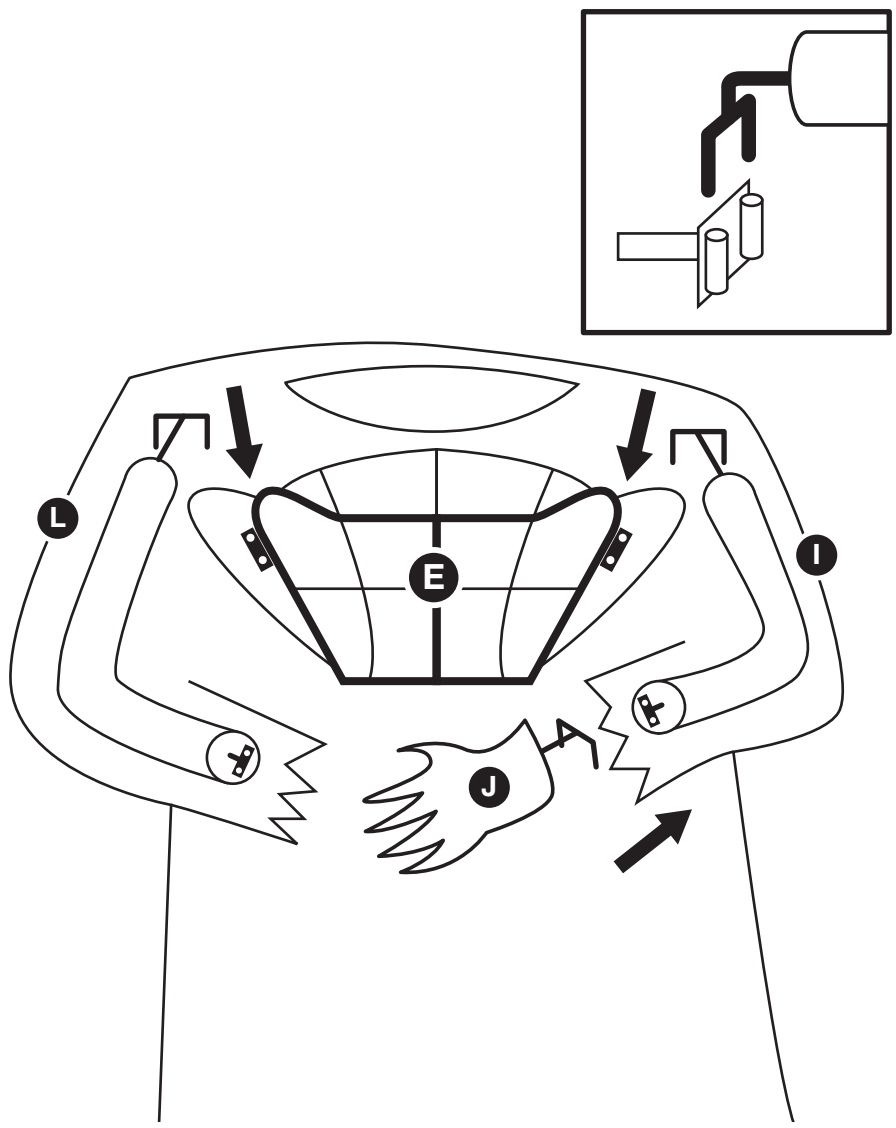

STEP 6
Slide the (I) Left Arm up through the left sleeve and slide the forked-hook into the left "shoulder" slot on the (E) Shoulder Support. Set the (J) Left Hand into place by sliding the forked-hook into the "wrist" slot housing on the end of the arm.

PROCEED TO PAGE 3 > >

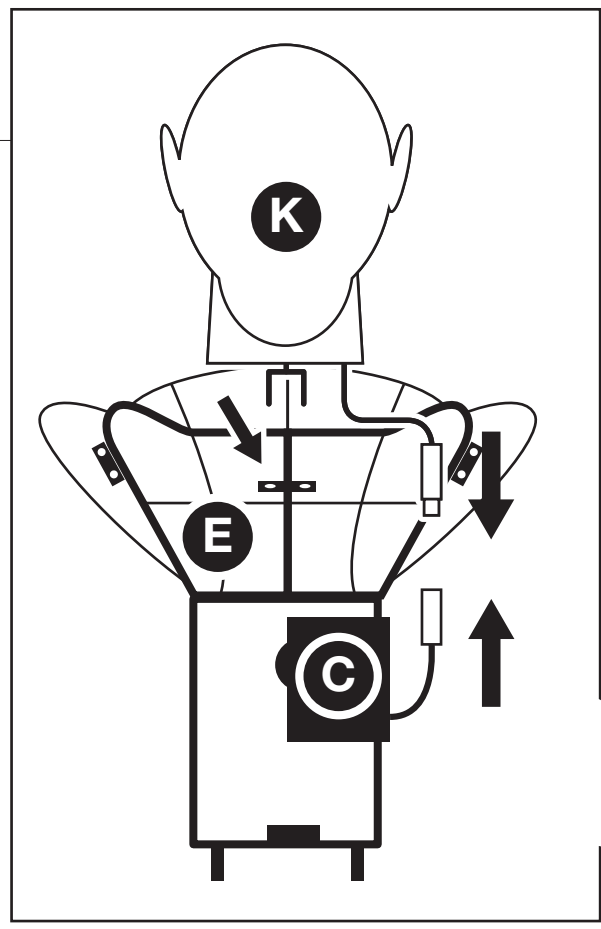

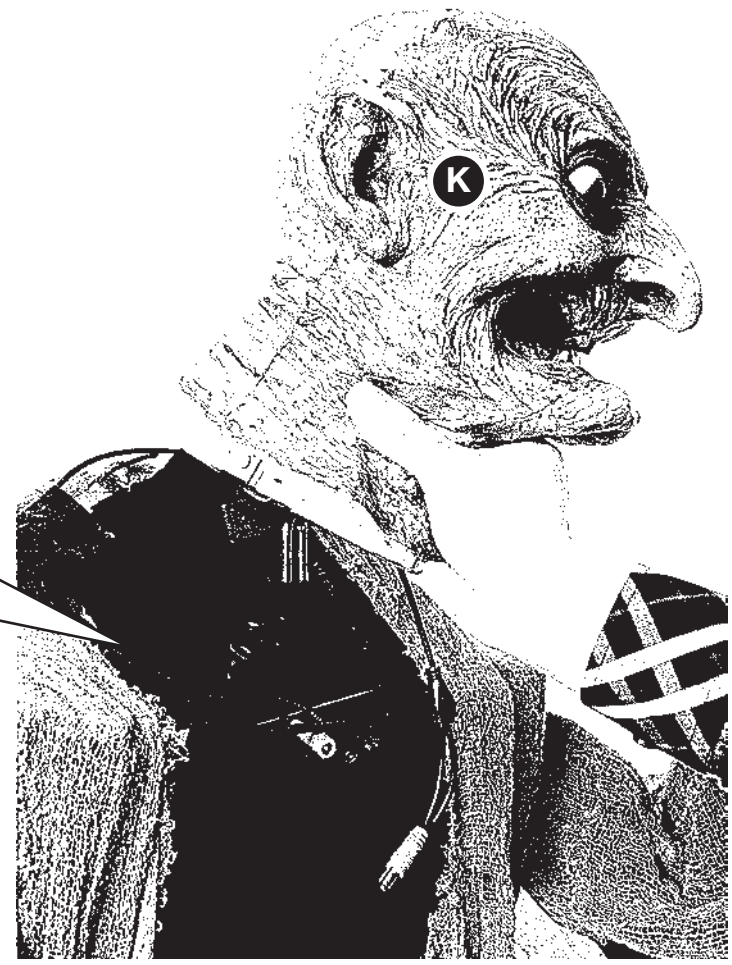

STEP 7
Set the (K) Head onto the (E) Torso Frame by sliding the forked-hook into the “neck” slot housing on the (E) Shoulder Support. Connect the cables from the (K) Head to the color-coordinated cables on the (C) Torso Frame.

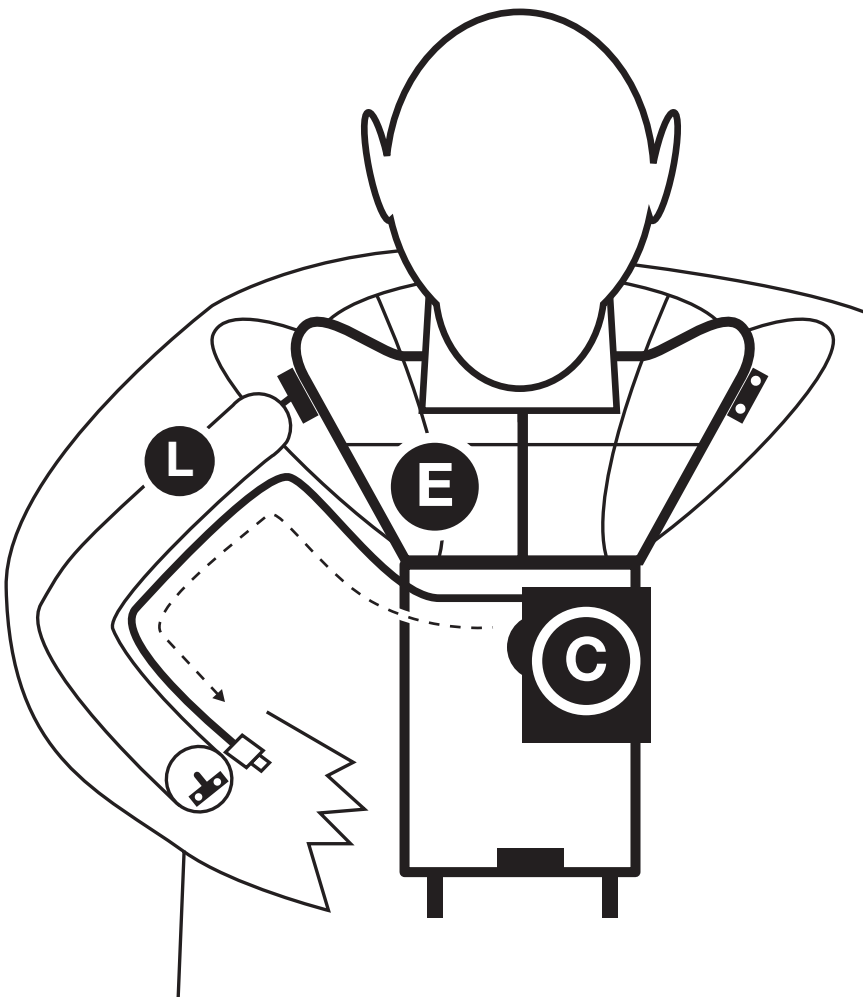

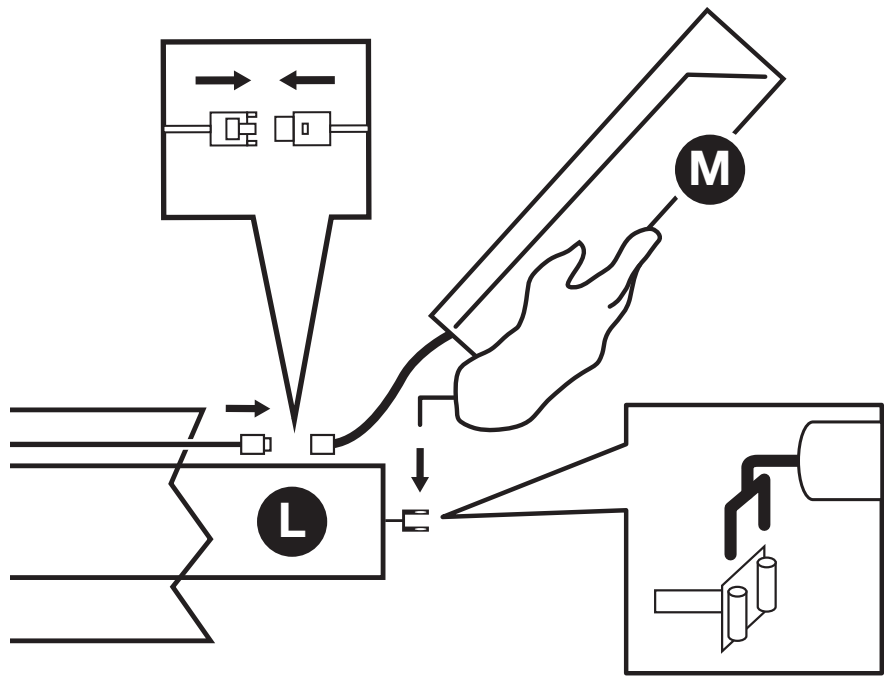

STEP 8
Now, slide the (L) Right Arm up through the right sleeve and slide the forked-hook into the right “shoulder” slot on the (E) Shoulder Support.

Reach up the right sleeve and guide the cable that is attached to the right side of the (C) Torso Frame down through the sleeve.

Set the (M) Right Hand with Book into place by sliding the forked-hook into the “wrist” slot housing on the end of the arm and connect the cable from the sleeve to the cable from the (M) Right Hand with Book.

Now you can secure the hook and loop closures at the back of the (G) Costume.

PROCEED TO PAGE 4 > >

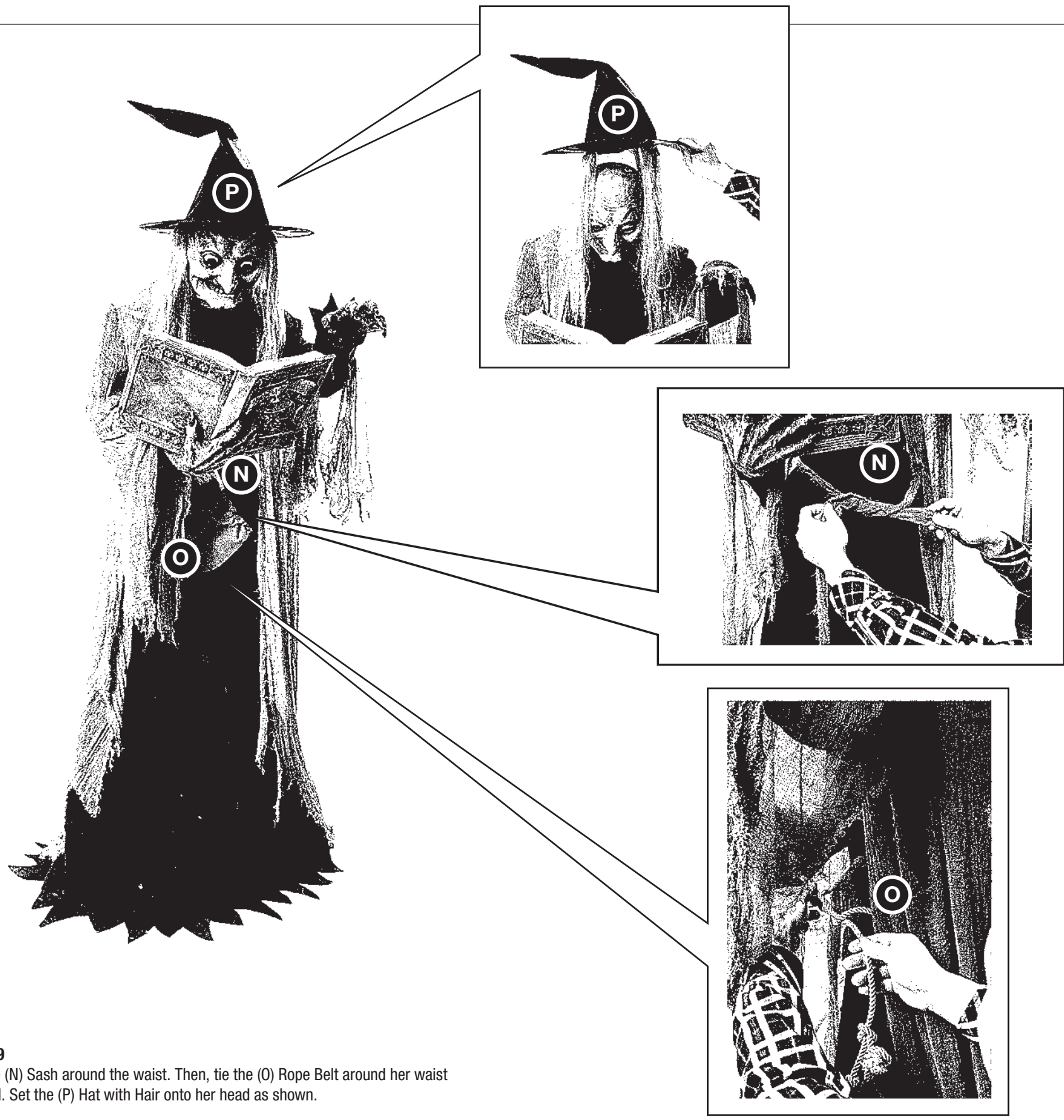

STEP 9
Tie the (N) Sash around the waist. Then, tie the (O) Rope Belt around her waist as well. Set the (P) Hat with Hair onto her head as shown.

OPERATION INSTRUCTIONS:

1. Plug the UL Power Adapter into a standard power outlet and adjust the settings on the Function Control Box to your liking.

2. Spell Speaking Witch has 3 operation settings which can be found on the main Function Control Box on the (C) Torso Frame:
   - On: This setting allows the item to run continuously.
   - Sensor: This setting allows the item to only be activated when the infra-red sensor is activated. The item will operate for one audio-cycle with each sensor activation. The Infra-red (IR) sensor will activate when someone comes within an 80-degree angle from left-to-right, as well as from above and below. The infra-red (IR) sensor has a range of up to 2 meters/6.56 feet, and can work in all lighting conditions – bright light to no-light! NOTE: Upon first operation, the infra-red (IR) sensor will take approximately 30 seconds to calibrate to its surroundings; once calibrated, the IR sensor will allow the item to operate quickly once activated.
   - Off/Try-Me: This setting allows the item to be activated only if the Try-Me is triggered. The item will operate for one audio-cycle with each activation.

3. The Function Control Box also includes a Volume control knob, which allows you to adjust the volume to be as loud or as quiet as needed. Be sure to test the item before finalizing your display so you can set the volume to your liking.
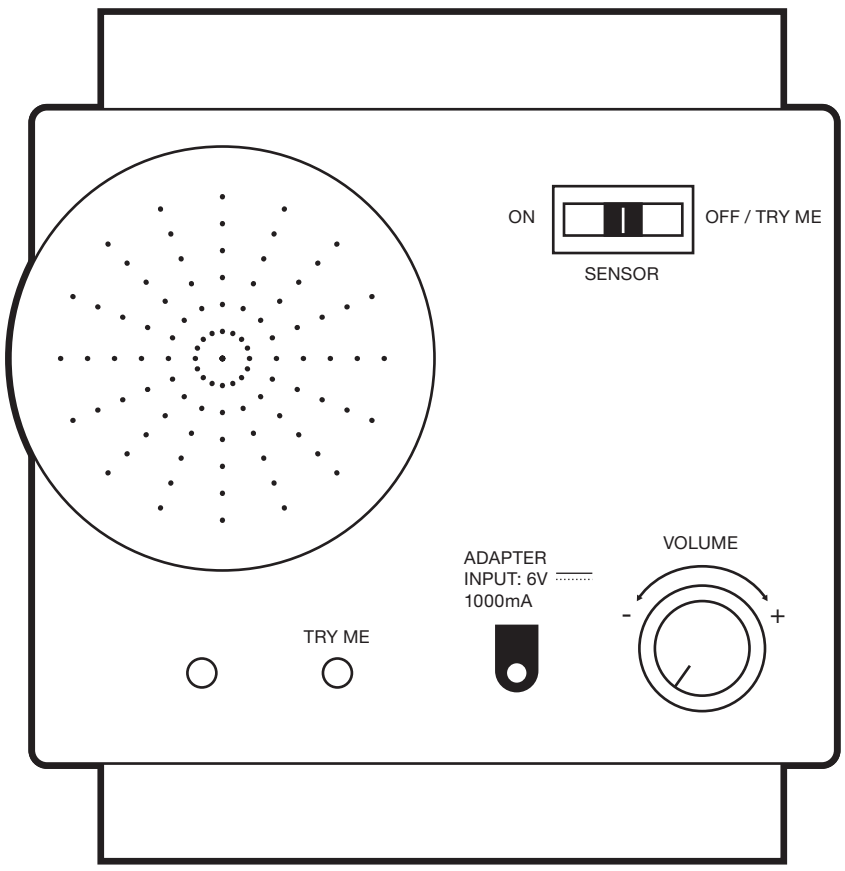
Enjoy your SPELL SPEAKING WITCH