SPIRIT

GRAVEYARD GHOUL

Installation and Operating Instructions

Keep all plastic and wire parts away from children.

WARNING: DO NOT TURN ON THE PROP UNTIL FULLY ASSEMBLED. STAY CLEAR OF THE PROP WHILE OPERATING.

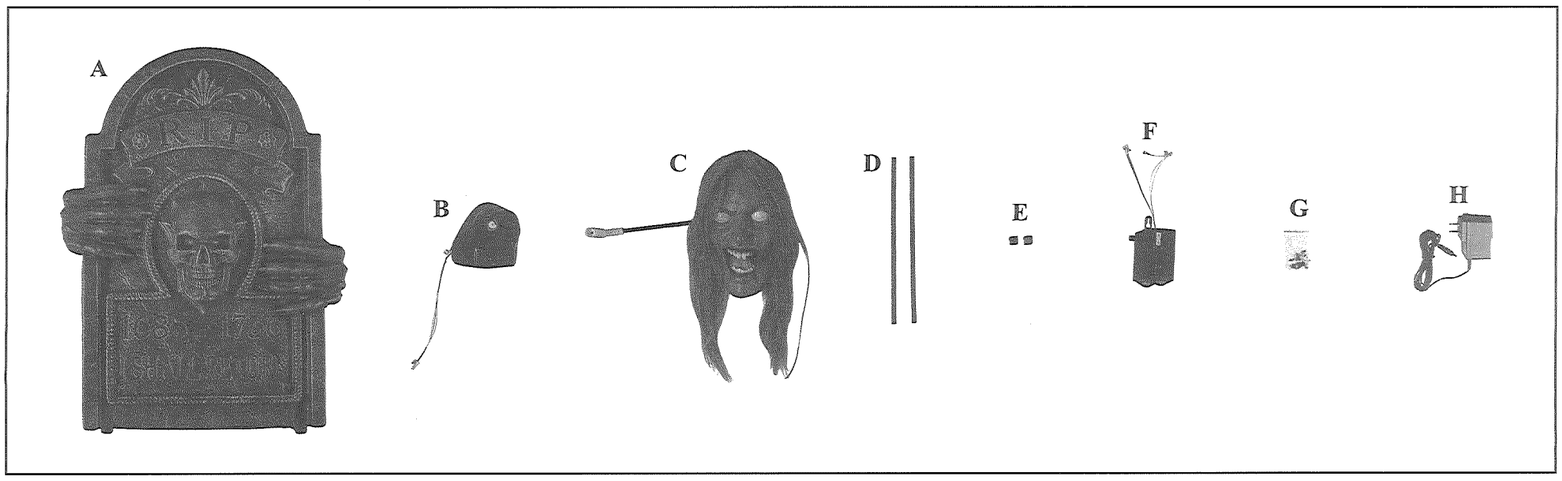

A: Tombstone

B: Mechanism

C: Head

D: Metal support poles

E: Plastic buttons (x2)

F: Control box

G: Screws (x6, 2 extra)

H: 6V2A Adapter

Assembly:
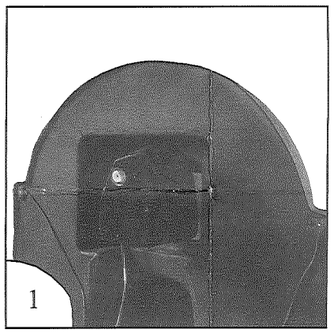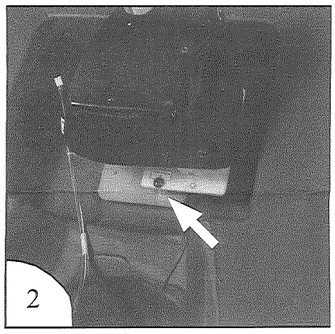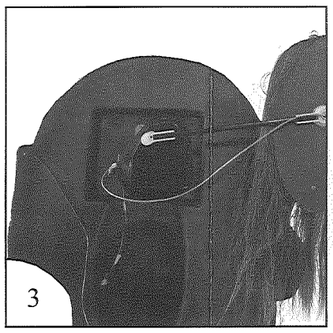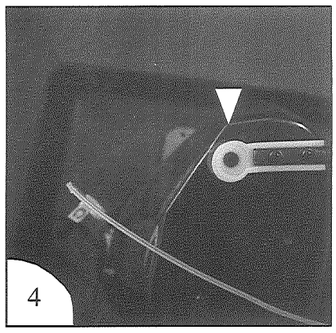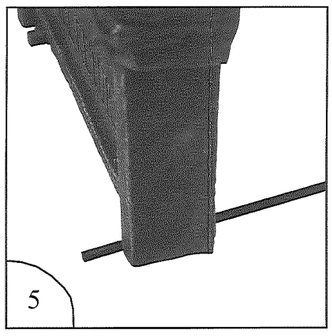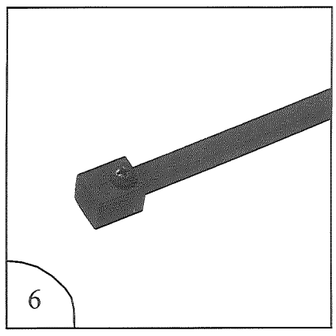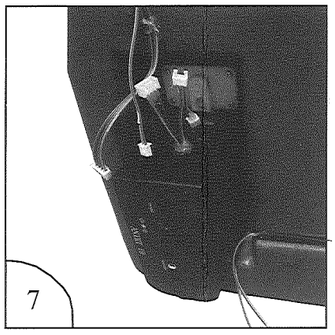
1. Attach the mechanism (Part B) to plastic base located on the back of the tombstone (Part A). See. Fig. 1.
2. Secure the mechanism (Part B) to the plastic base located on the back of the tombstone (Part A) using one of the screws (Part G) provided. See Fig. 2.
3. Attach the head (Part C) to the mechanism (Part B) by inserting the plastic connector located on the head (Part C) to the mechanism (Part B). See Fig. 3.
4. Secure the head (Part C) to the mechanism (Part B) using one of the screws (Part G) provided. See Fig. 4.
5. Slide the metal support poles (Part D) through the holes located on the bottom sides of the tombstone (Part A). See Fig. 5.
6. Secure the plastic buttons (Part E) to the ends of the metal support poles (Part D) using a screw (Part G) provided. See Fig. 6.
7. Hang the control box (Part F) on the hook located on the back of the tombstone (Part A). See Fig. 7.
8. Connect all the wires from the tombstone (Part A), mechanism (Part B) to the matching wires on the control box (Part F).
9. Turn the switch on control box (Part F) to ON position. Plug in the 6V 2A Adapter (Part H) into a suitable outlet.